Hi-MO X6 Explorer

LR5-54HTD
415~440M

- Suitable for Distribution Market
- Simple design embodies modern style
- Better energy generation performance
- High-quality module guarantees long-term reliability

25 25-year Warranty for Materials and Processing

30 30-year Warranty for Extra Linear Power Output



Complete System and Product Certifications

IEC 61215, IEC 61730, UL 61730

ISO9001:2015: ISO Quality Management System

ISO14001: 2015: ISO Environment Management System

ISO45001: 2018: Occupational Health and Safety

IEC62941: Guideline for module design qualification and type approval

LONGi

Hi-MO X6 Explorer

LR5-54HTD 415~440M

22.5%	0~3%	<1.5%	0.40%
MAX MODULE EFFICIENCY	POWER TOLERANCE	FIRST YEAR POWER DEGRADATION	YEAR 2-30 POWER DEGRADATION

Additional Value

30-Year Power Warranty

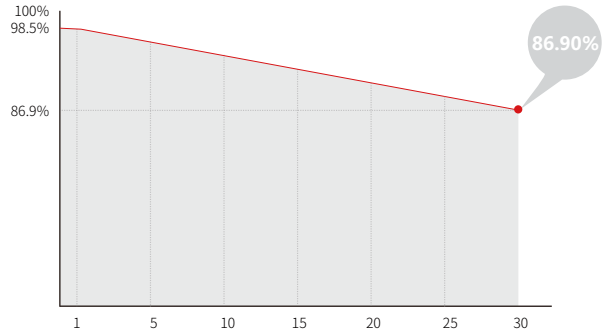

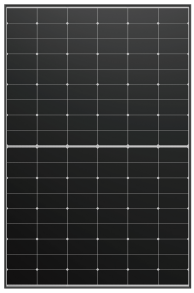

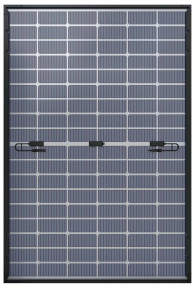

Mechanical Parameters

Cell Orientation	108 (6×18)
Junction Box	IP68
Output Cable	4mm², ±1200mm length can be customized
Glass	Double galss, 2.0mm+1.6mmsemi-tempered glass
Frame	Anodized aluminum alloy frame
Weight	22.5kg
Dimension	1722×1134×30mm
Packaging	36 pcs per pallet / 216pcs per 20' GP / 936pcs per 40' HC

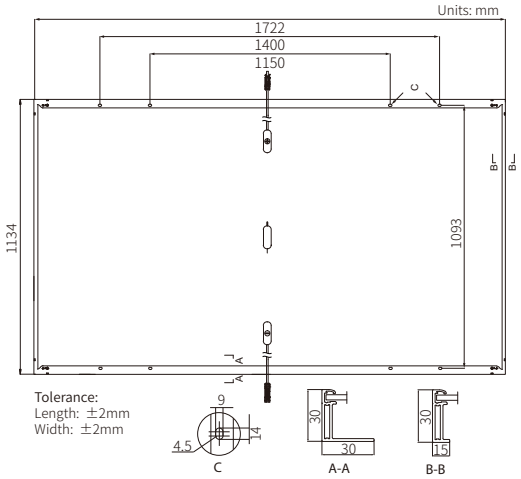

Electrical Characteristics

STC : AM1.5 1000W/m² 25°C NOCT : AM1.5 800W/m² 20°C 1m/s

Test uncertainty for Pmax: ±3%

Module Type	LR5-54HTD-415M		LR5-54HTD-420M		LR5-54HTD-425M		LR5-54HTD-430M		LR5-54HTD-435M		LR5-54HTD-440M	
Testing Condition	STC	NOCT	STC	NOCT	STC	NOCT	STC	NOCT	STC	NOCT	STC	NOCT
Maximum Power (Pmax/W)	415	310	420	314	425	318	430	321	435	325	440	329
Open Circuit Voltage (Voc/V)	39.02	36.64	39.22	36.82	39.42	37.01	39.62	37.20	39.82	37.39	40.02	37.57
Short Circuit Current (Isc/A)	13.63	11.01	13.71	11.08	13.79	11.13	13.86	11.20	13.95	11.27	14.02	11.32
Voltage at Maximum Power (Vmp/V)	32.30	29.47	32.50	29.65	32.70	29.83	32.90	30.02	33.10	30.20	33.31	30.40
Current at Maximum Power (Imp/A)	12.85	10.52	12.93	10.59	13.00	10.66	13.07	10.70	13.15	10.77	13.21	10.83
Module Efficiency(%)	21.3		21.5		21.8		22.0		22.3		22.5	

Electrical characteristics with different rear side power gain (reference to 425W front)

Pmax /W	Voc/V	Isc /A	Vmp/V	Imp /A	Pmax gain
446	39.42	14.47	32.70	13.65	5%
468	39.42	15.16	32.70	14.30	10%
489	39.52	15.85	32.80	14.95	15%
510	39.52	16.54	32.80	15.60	20%
531	39.52	17.23	32.80	16.25	25%

Operating Parameters

Operational Temperature	-40°C ~ +85°C
Power Output Tolerance	0~3%
Maximum System Voltage	DC1500V (IEC)
Maximum Series Fuse Rating	30A
Nominal Operating Cell Temperature	45±2°C
Protection Class	Class II
Fire Rating	IEC Class C

Mechanical Loading

Front Side Maximum Static Loading/Snow Loading Resistance	5400Pa
Rear Side Maximum Static Loading/Wind Pressure Resistance	2400Pa
Hailstone Test	25mm Hailstone at the speed of 23m/s

Temperature Ratings (STC)

Temperature Coefficient of Isc	+0.050%/°C
Temperature Coefficient of Voc	-0.230%/°C
Temperature Coefficient of Pmax	-0.290%/°C

LONGi

Specifications included in this datasheet are subject to change without notice. LONGi reserves the right of final interpretation. (20240221V19) DG